71963-00001.B

i

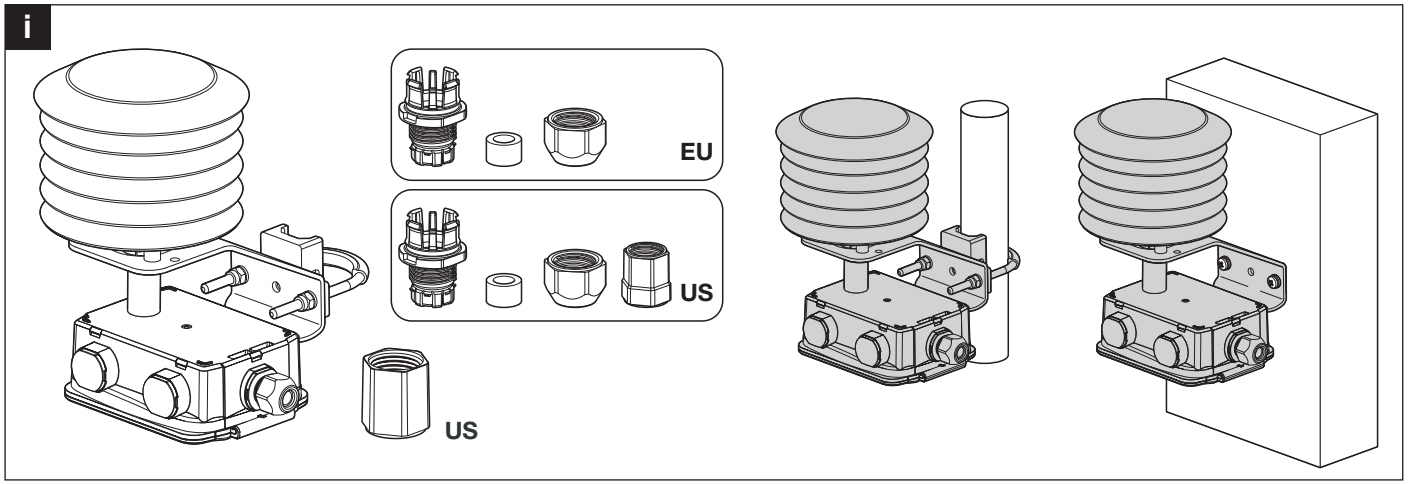

1

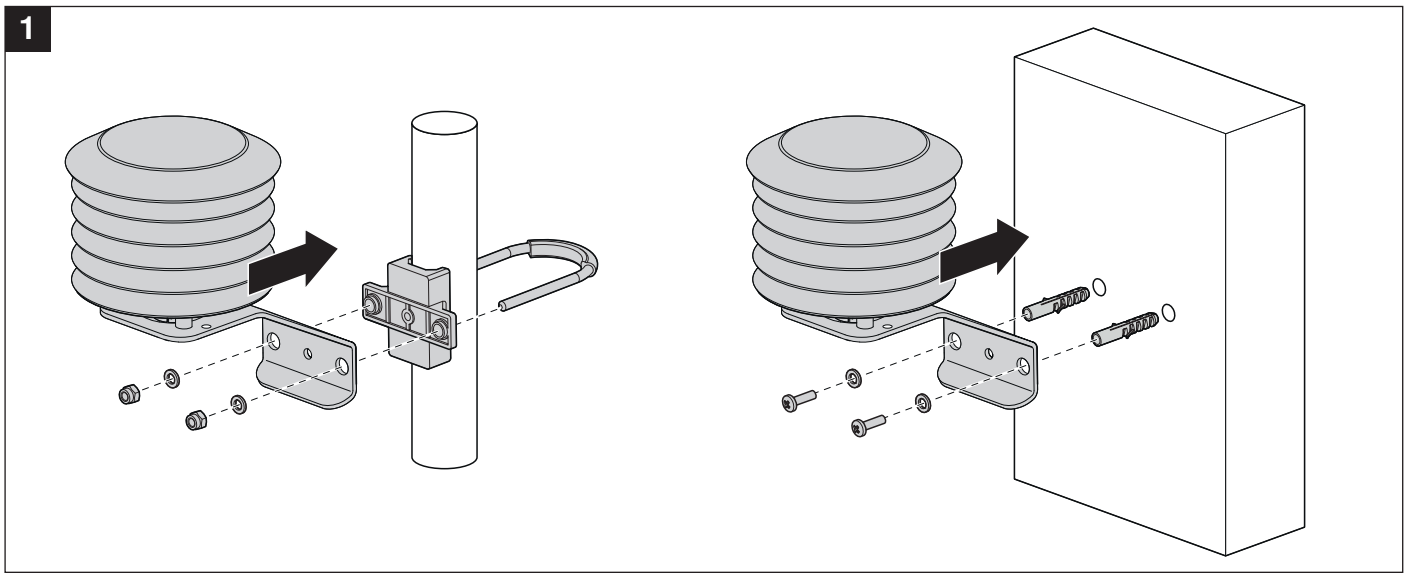

2

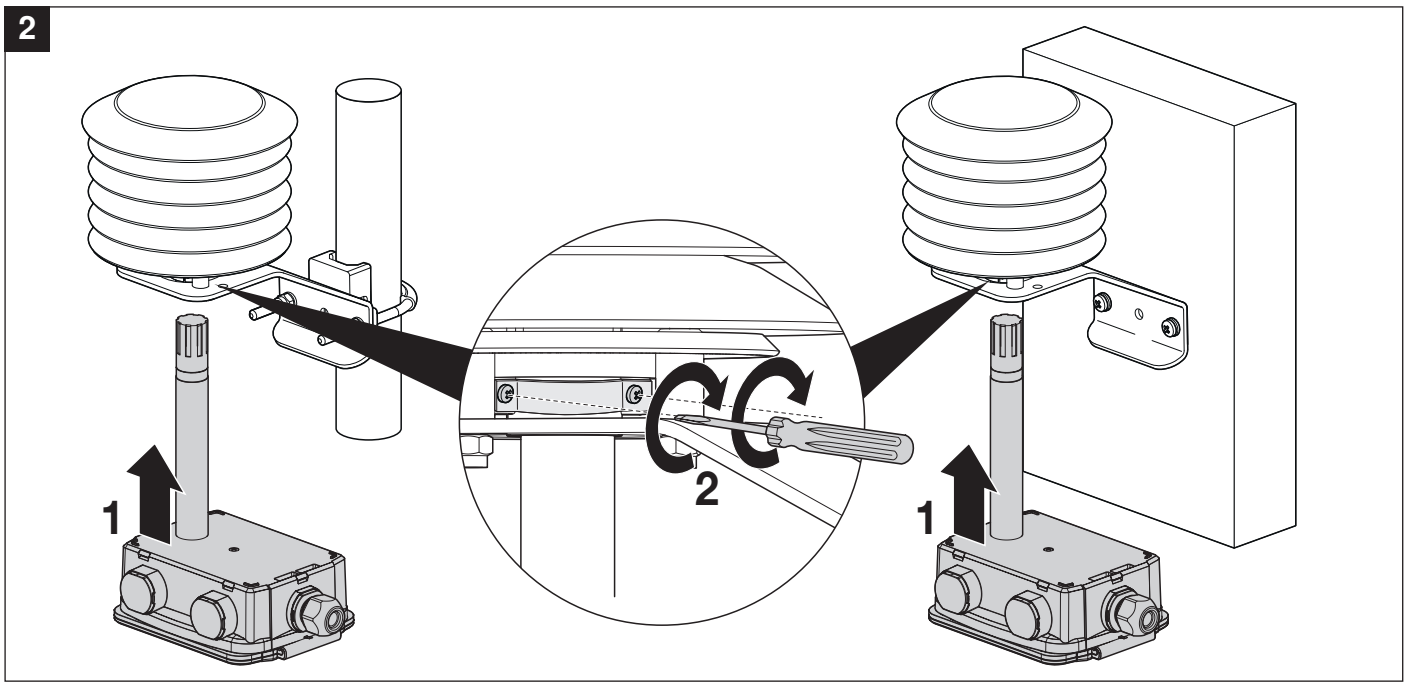

www.belimo.com/safety

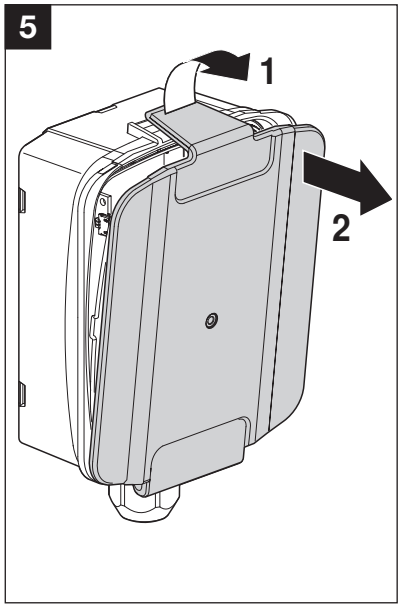
5
1
2

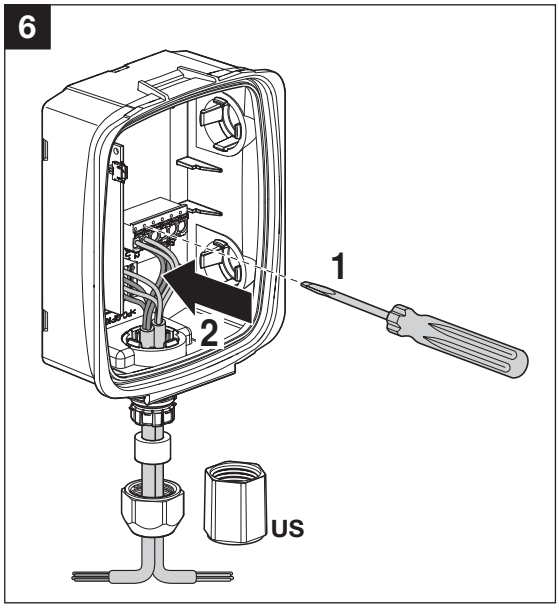
6
1
2
US

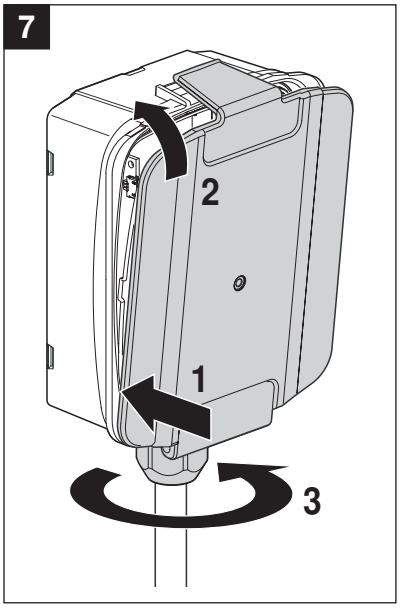
7
2
1
3

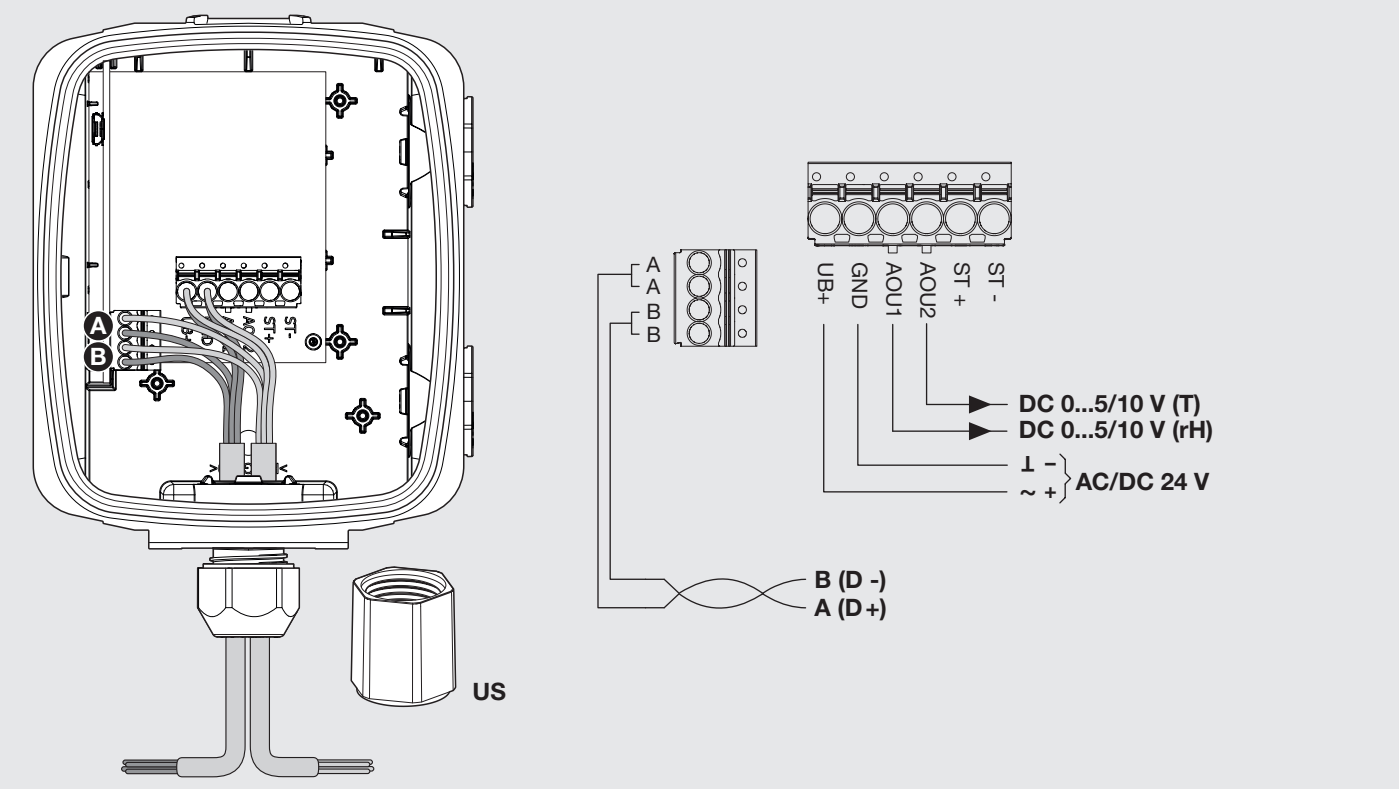
A
B
ST-
ST+
AC
US
A
A
B
B
UB+
GND
AOU1
AOU2
ST +
ST -
DC 0...5/10 V (T)
DC 0...5/10 V (rH)
⊥ –
~ +
AC/DC 24 V
B (D -)
A (D+)

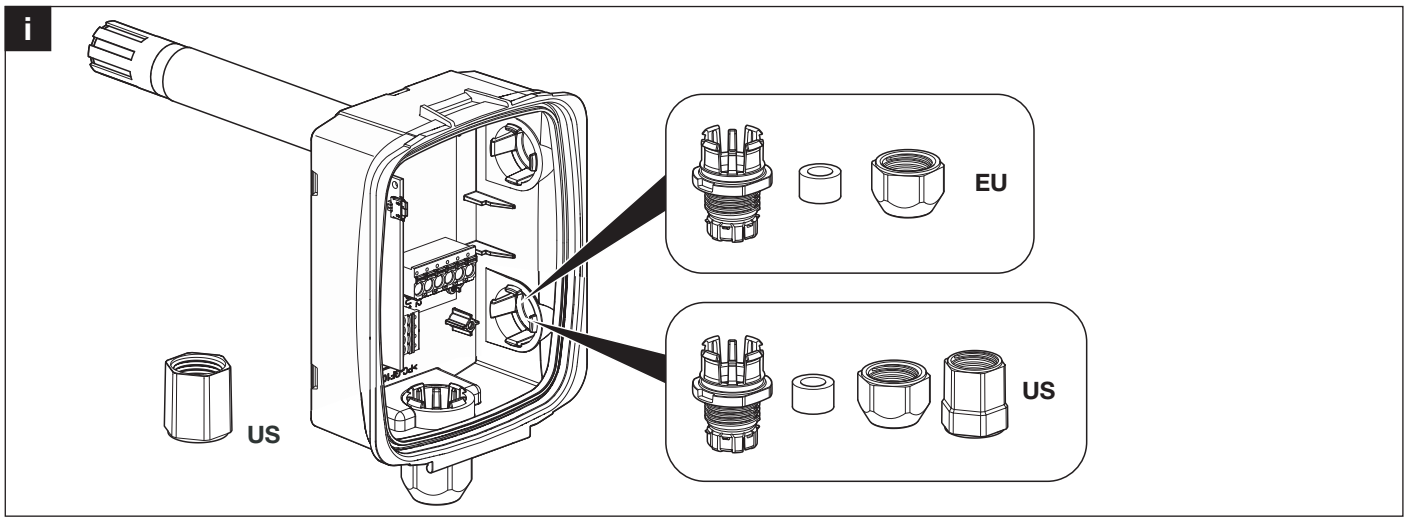
i
EU
US
US